International Journal of Engineering & Technology, 7 (3.2) (2018) 116-122

International Journal of Engineering & Technology

Website: www.sciencepubco.com/index.php/IJET

Research paper

Thermal Modernization of the Panel Buildings External Walls

Olena Filonenko[1*],Oleg Yurin[2], Olga Kodak[3]

[1]*Poltava National Technical Yuri Kondratyuk University, Ukraine*
[2]*Poltava National Technical Yuri Kondratyuk University, Ukraine*
[3]*Poltava National Technical Yuri Kondratyuk University, Ukraine*
**Corresponding Author E-Mail: Olena.Filonenko.Pf@Gmail.Com*

Abstract

The thermal protection level of the first mass series panel buildings (series 111-94) is the lowest among residential buildings in Poltava. The problems of these buildings' thermal modernization, is consideration of heat-conducting inclusions effect on the reduced resistance to heat transfer. In the studies such heat-conducting inclusions as the panel joints' design, the window slope and the external wall geometry (the external corner) were taken into account. Studies were performed for the four pattern sections of the outer wall. Panels of two thickness variants with two joint designs were under consideration.
To analyze the thermal protection level, the results of the two-dimensional temperature fields' calculations were used. The analysis of the wall panels' thermal protection level before the thermal modernization was performed. The magnitude of the heat conducting inclusions effect on reduced resistance of the walling to the heat transfer before and after the thermal modernization is determined. Possible ways of improving the wall panels' heat-protective properties to the level of the standards in Ukraine are considered. The optimal variant of insulation for each pattern was chosen.

Keywords: *additional heat insulation, panel walls of residential houses, thermal modernization*

1. Introduction

Nowadays, the problem of energy saving determines the terms of Ukraine's surmounting the lingering economic crisis in many aspects. The maximum energy saving reduces the country's dependence on the countries supplying fuel and power resources, reduces the energy intensity of national commodities.
One of the basic reserves of energy saving is reducing of the power resources consumption by housing and civil buildings, which portion makes over 80% of the total power consumption in the construction industry.
The existing stock of residential buildings in Poltava was largely created in the period when in the process of designing and construction, the initial costs were primarily saved, and the energy operating costs were considered to be secondary indices in the end-use efficiency calculation. The main part of this fund in Poltava is constituted by panel houses of the first mass series.
Heat protective properties of these houses do not meet the present-day standards. Therefore, the need for energy conservation requires thermal modernization of the above buildings' walling structures.
The issue of improving the building's energy efficiency is topical not only for Ukraine but also for most of the EU countries [1-4].

2. Recent Research Sources and Publications Review

Many authors' studies were dedicated to the issue of improving the heat protective properties of external panel walls of residential and public buildings to comply with the requirements of standards. For example, G.P. Vasilyev, V.A. Lichman, S.S. Golubev performed a series of thermal engineering tests for external wall panels at a number of Moscow integrated house-building plants. The research results are presented in [5]. During the study, the impact of "cold bridges" on the thermal quality of external wall panels was assessed, technical solutions as to their removal were developed.
Theoretical methods approvement was performed to calculate the thermal characteristics of panel houses. The resulting thermal characteristics of panel houses walls were obtained. N.D. Danilov, A.A. Sobakin, E.G. Slobodnikov were engaged in analyzing temperature field formation in the outer wall comprising the reinforced concrete facade panel with mounting hooks [6]. V.S. Belyaev studied thermal qualities of sandwich panels with flexible connectors and reinforced concrete dowels [7].
In the study [8], the analysis of energy consumption for houses built in the period from 1965 to 1990 was performed. Comparison of heat transfer coefficients in unreconstructed buildings and their comparison with the standard values are presented. Review on the real energy consumption of buildings before and after modernization is performed. The method to estimate the value of the heat transfer performance uniformity factor based on the analysis of thermograms of the buildings' external walling parts is explained in [9].
In the studies of [10, 11], the impact of boundary zones on the thermal protection and energy efficiency of the building is estimated. Recommendations for removing the heat protection defects in the node points of the building walling are described by D.V. Portnyagin. [12].
Analysis of the defects arising during the thermal modernization of the panel buildings' walls was carried out by Róbert Sztanyi [13], as well as by E. Megyesi and M. Brumaru [14]. Experience of accounting heat transfer performance irregularities in the practice of walling structures designing in the countries of North

and Central Europe is represented in [15]. The mathematical model of formation of pores of raw material mixture are presented in [16].

3. Highlighting Still Unresolved Issues of the Overall Problem

Analysis of the studies having been performed by many authors in recent years, led to the conclusion that in most studies of the panel walls' heat protective properties, new designs had been considered, meeting modern standards of thermal insulation. During thermal modernization of external walls, in panel houses of the first mass series, the impact of heat-conducting inclusions, such as panels joint and window jamb, that significantly deteriorate their reduced heat transfer resistance, was not taken into account.

4. Assignments

The aim of the present study was to develop recommendations for thermal modernization of the external walls in panel residential houses of the first mass series (series 111-94). In determining the thickness of additional heat insulation in the panel walls the impact of the panel walls joint and window jambs presence on the reduced heat transfer resistance value was taken into account. Solving this problem was performed based on the temperature fields calculation.

5. Methods

The temperature fields studies were performed in the integrated dialog system that permits solving asymmetric and planar tasks of linear and nonlinear stationary and non-stationary thermal conductivity. The program permits to describe the problem (geometry, properties of the medium, boundary conditions) and to solve it to high precision, analyze the solution by means of color graphics and preserve the results in a form suitable for further analysis. Solution of the stationary thermal conductivity tasks is proceeded by the boundary conditions determination.

6. Results and Discussion

The first panel houses in Poltava were built in accordance with series 111-94. At the first stage of construction, the houses' wall panels were made of keramzit concrete (LECA – lightweight expanded clay aggregate) and had the total thickness of 300 mm. The panels comprised two layers of sand-cement mortar with the thickness of 20 mm. As it was demonstrated by the studies performed by the department of "Architecture of civil and industrial buildings" at Poltava Civil Engineering Institute in 1982, keramzit concrete density of the panels was $\rho_0 = 1400\ \mathrm{kg/m^3}$; density of the panels joints embedding concrete was $\rho_0 = 1800\ \mathrm{kg/m^3}$. The design of the panels' vertical joints in this series houses is shown in Figure 1.

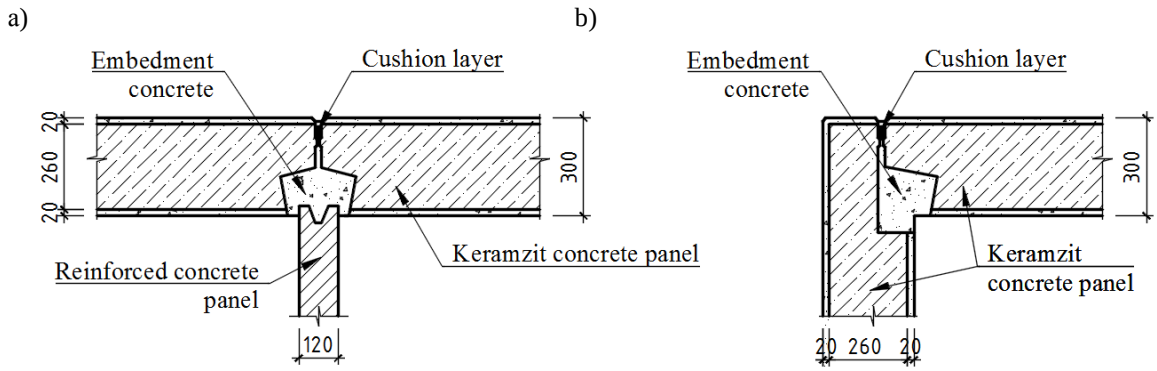

Fig. 1: Panel joints: a) coursed; б) angle

Heat transfer resistance of these panels is $R_\Sigma = 0.608\ \mathrm{m^2\ K/W}$ that is much less than the standardized value according to [17] $R_{q.min} = 3.3\ \mathrm{m^2\ K/W}$ (1-st temperature zone). The temperature difference between the inside air temperature and the temperature of the inner surface of the walling structure is $\Delta t_{red} = 7.9$ °C, that exceeds the standardized value $\Delta t_{sh} = 4$°C. It means that the second thermal protection requirement is not met either. The minimum temperature of the walling inner surface is $\tau_{i\,min} = 12.1$°C that exceeds the standardized value $t_d = 10.7$ °C. The third thermal protection requirement is met.

The heat-protective properties of panel walls are affected by heat-conductive inclusions, such as panels joint and window jamb. Therefore, the reduced heat transfer resistance of individual wall sections will depend on:

- presence of panel joint and window jambs;
- their mutual alignment;
- width of the window;
- type of the panels joint (coursed, angle).

Panel houses of the first mass series in Poltava comprise four variants of repetitive sites or patterns.

The basic dimensions of these patterns and the length of the design models established for temperature fields calculation are presented in Figure 2.

a)

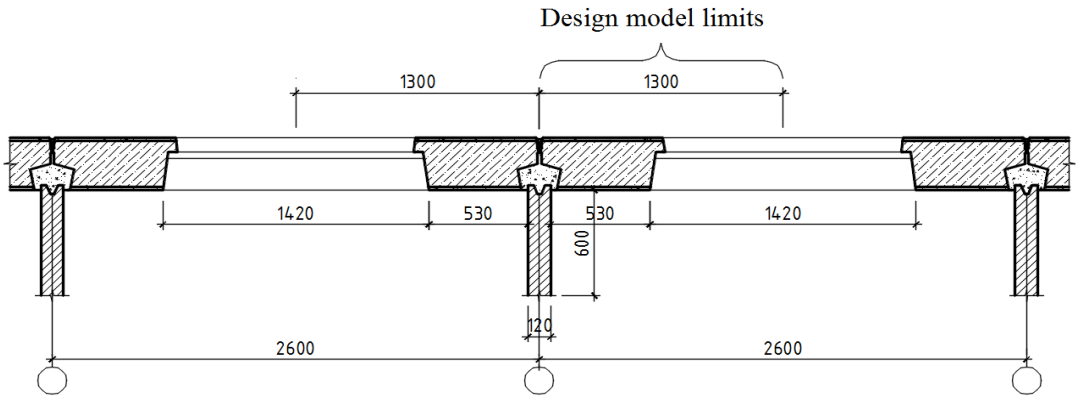

b)

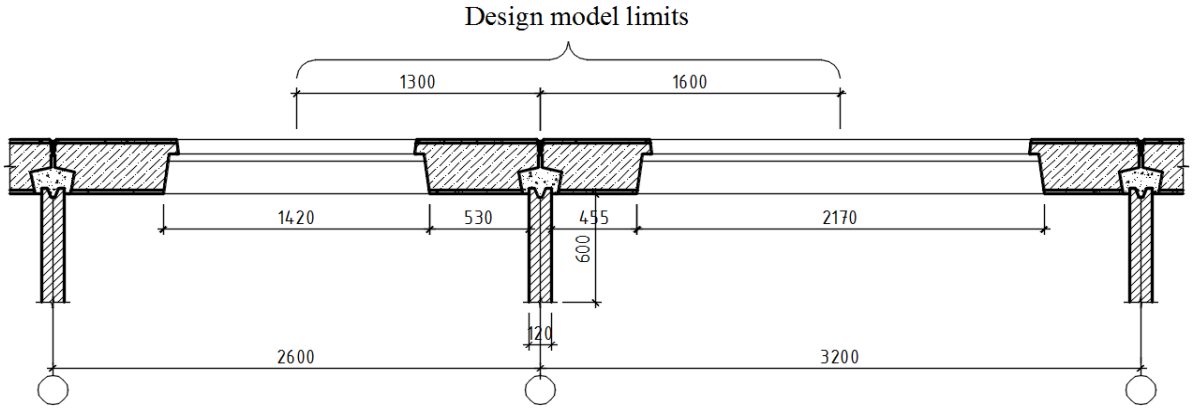

c)

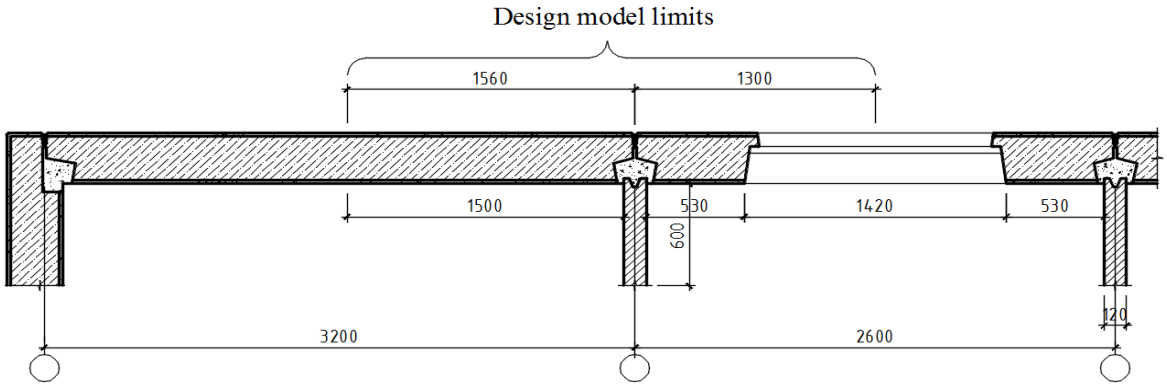

d)

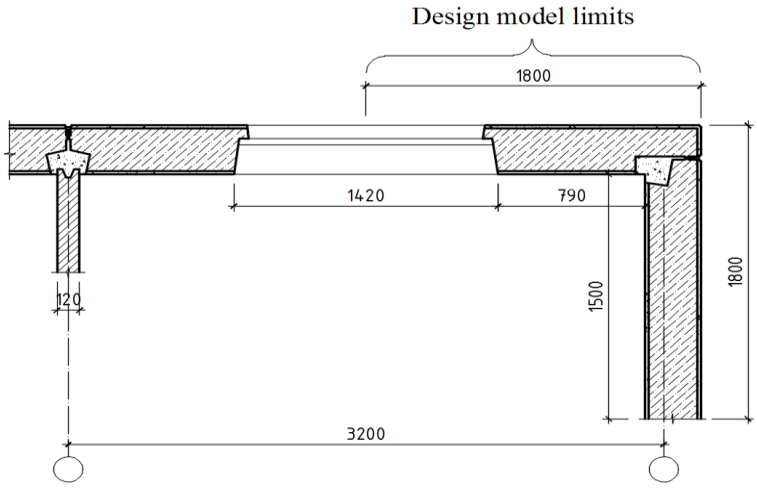

Fig. 2: Design models limits: a) pattern 1; b) pattern 2; c) pattern 3; d) pattern 4

Design model No.1, used for the temperature field calculation is presented in Figure 3.

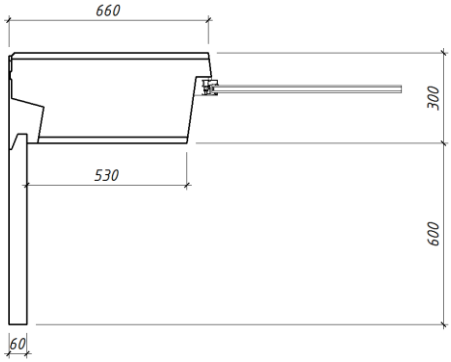

Fig. 3: Design model of pattern No. 1

Temperature field of pattern No.1 is presented in Figure 4.

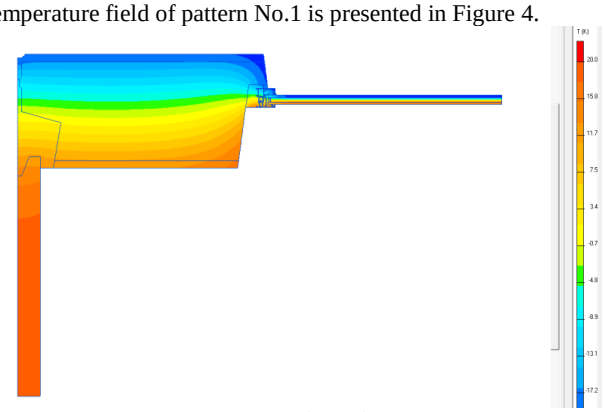

Fig. 4: Temperature field of pattern No.1

Based on the temperature field calculation results in pattern No.1, the reduced heat transfer resistance is $R_{\Sigma red} = 0.573\ m^2\ K/W$, which is less than $R_{q.min} = 3.3\ m^2\ K/W$; temperature difference between the inside air temperature and the reduced temperature of the walling structure's inner surface was $\Delta t_{red} = 7\ °C$, that exceeds $\Delta t_{sh} = 4\ °C$; epy minimum temperature of the inner surface is $\tau_{i\ min} = 4\ °C$, that is less than $t_{min} = 10.7\ °C$. It means that for the 1-st-temperature zone at the design outdoor temperature $t_{env} = -22\ °C$, all the three thermal protection requirements are not met.

It is evident that the reduced heat transfer resistance of the wall pattern $R_{\sum red}$ is less than the heat transfer resistance R_{Σ} (according to the heat engineering calculation). That is, not taking into account the heat-conducting inclusions (panels joint and window jamb) leads to overestimation of the actual heat transfer resistance of this wall pattern by 5.8%.

Similar calculations were performed for other design patterns of wall panels with the thickness of 300 mm. Summarized results of the study are presented in Tables 1-3.

Table 1 shows the percentage points, which the reduced heat transfer resistance is less than the heat transfer resistance based on the heat engineering calculations for all the designed patterns.

Table 1: Percentage points, which the reduced heat transfer resistance is less than the heat transfer resistance based on the heat engineering calculations (for 300 mm thick wall panels)

Designed pattern No.	Percentage points, which the reduced heat transfer resistance is less than the heat transfer resistance based on the heat engineering calculations
1	5.8
2	6.1
3	2.5
4	6.6

Table 2 presents heat protective properties of the walling panels' designed patterns.

Table 2: Heat protective properties of the walling panels' designed patterns

Designed pattern No.	R_{Σ},	$R_{\Sigma red}$,	Δt_{red}, °C	$\tau_{i.min}$, °C
1	0.608	0.573	7	4
2		0.571	7	4
3		0.593	7.6	4
4		0.568	8.2	3.9

Table 3 presents the percentage points which the heat transfer resistance R_{Σ} (based on the heat engineering calculations) and the reduced heat transfer resistance $R_{\sum red}$ (based on the temperature fields calculation) are less than the standardized value $R_{q.min}$.

Table 3: Percentage points which R_{Σ} and $R_{\sum red}$ are less than the standardized value $R_{q.min}$

Designed pattern No.	Percentage points which R_{Σ} and $R_{\sum red}$ are less than the standardized value $R_{q.min}$	
	R_{Σ},	$R_{\Sigma red}$,
1	81.6	82.6
2		82.7
3		82
4		82.8

As is evident from the studies performed, the heat protective properties of the panel houses' walls with thickness of 300 mm, belonging to the first mass series in the city of Poltava, do not comply with the present day standardized norms. None of the designed patterns meets all the three heat protection requirements. The reduced heat transfer resistance is less than the standardized value by an average of 82.5%. Not taking into account heat-conducting inclusions (panels joint, window jamb) leads to overestimation of the actual heat transfer resistance by an average of 5.3%.

In the late 80-ies of the last century, Poltava DBK (integrated house-building plant) switched to produce wall panels having the thickness of 350 mm with the improved panels joint (Figure 5).

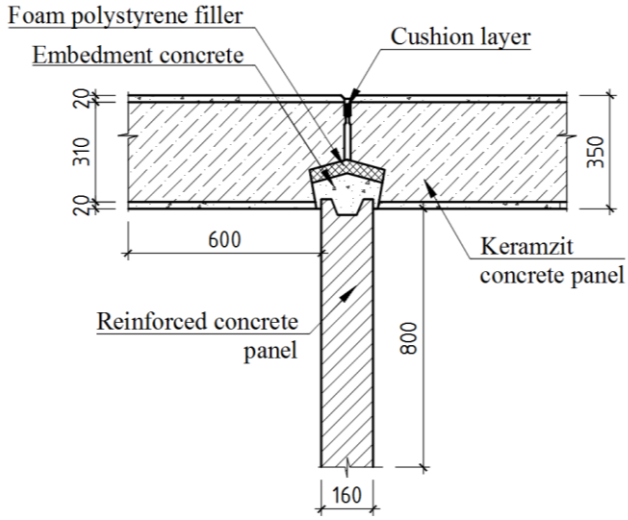

Fig. 5: Wall panels' joint structure

In the panels joint a foam polystyrene thermofiller with density equal to $\rho_0 = 50\ kg/m^3$ and thickness of 40 mm was used. The cavity between the wall panels was filled with lightweight concrete.

For these panels values of heat protective properties were obtained based on the temperature fields calculations. Summarized results of the study are presented in Tables 4-6.

Table 4 presents the percentage points, which the reduced heat transfer resistance is less than the heat transfer resistance based on the heat engineering calculations including all the designed patterns.

Table 4: Percentage points, which the reduced heat transfer resistance is less than the heat transfer resistance based on the heat engineering calculations (for 350 mm thick wall panels)

Designed pattern No.	Percentage of heat transfer resistance reduction taking into account heat conducting inclusions
1	4.2
2	4.5
3	0.1
4	5.0

Table 5 presents heat protective properties of the wall panels' designed patterns.

Table 5: Heat protective properties of the wall panels' designed patterns

Designed pattern No.	R_{Σ},	$R_{\Sigma red}$,	Δt_{red}, °C	$\tau_{i\,min}$, °C
1	0.685	0.656	6	3.6
2		0.654	5.9	3.6
3		0.684	6.4	3.6
4		0.651	7	3.6

Table 6 presents the percentage points which the heat transfer resistance R_{Σ} (based on the heat engineering calculations) and the reduced heat transfer resistance $R_{\Sigma red}$ (based on the temperature fields calculations) is less than the standardized value $R_{q.min}$.

Table 6: Percentage points which R_{Σ} and $R_{\Sigma red}$ are less than the standardized value $R_{q.min}$

Designed pattern No.	Percentage points which R_{Σ} and $R_{\Sigma red}$ are less than the standardized value $R_{q.min}$	
	R_{Σ},	$R_{\Sigma red}$,
1	79.2	80.1
2		80.2
3		79.3
4		80.3

As is evident from the studies performed, heat protective properties of panel houses walls with the thickness of 350 mm, do not comply with the present day standards. None of the designed patterns meets all the three heat protection requirements. The reduced heat transfer resistance is less than the standardized value by an average of 80%. Not taking into account heat-conducting inclusions (panels joint, window jamb) leads to overestimation of the actual heat transfer resistance by an average of 3.5%.

Heat insulation of residential houses' walls in Poltava is usually performed with mineral wool.

At the first stage of the study, plates made of stone wool RONTROCK MAX E with the density of $\rho_0 = 120\ \mathrm{kg/m^3}$ and the thermal conductivity of $\lambda = 0.036\ \mathrm{W/(m \cdot K)}$ were applied for thermal modernization of panel walls.

According to the heat engineering calculation (excluding heat-conducting inclusions), the thermal insulation thickness for 300 mm and 350 mm thick panels, was 100 mm.

At this insulation thickness:

1) for 300 mm thick panel:

- $R_{\Sigma} = 3.392\ \mathrm{m^2\,K/W} > R_{q.min} = 3.3\ \mathrm{m^2\,K/W}$;
- $\Delta t_{red} = 1.4\ °C < \Delta t_{sh} = 4°C$;
- $\tau_{i\,min} = 18.6°C > t_d = 10.7\ °C$.

2) for 350 mm thick panel:

- $R_{\Sigma} = 3.469\ \mathrm{m^2\,K/W} > R_{q.min} = 3.3\ \mathrm{m^2 K/W}$;
- $\Delta t_{red} = 1.4\ °C < \Delta t_{sh} = 4°C$;
- $\tau_{i\,min} = 18.6°C > t_d = 10.7\ °C$.

Thus, all the three heat insulation requirements are met.

At the same time, taking into account the impact of heat-conducting inclusions, in pattern No.1, with the panel thickness of 300 mm, the reduced heat transfer resistance is $R_{\Sigma red} = 1.598\ \mathrm{m^2\,K/W}$, which is well below the standardized value and less than the heat transfer resistance based on the heat engineering calculation.

The reason is that with a small width of the partition, a large quantity of heat flow is moving from the inner wall surface and the window jamb to the outer surface, not through the insulation, but through the cold quarter of the window (Figure 6).

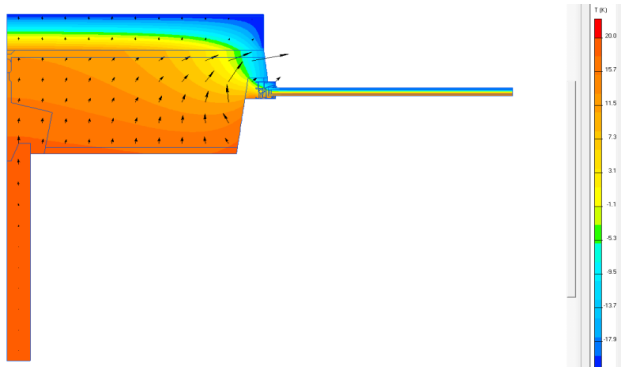

Fig. 6: Vector of the heat flow motion with the basic thermofiller layer's thickness of 100 мм

The reduced heat transfer resistance, which takes into account the presence of heat-conducting inclusions, is less than the heat transfer resistance based on the heat engineering calculation by 53%.

Table 7 presents the percentage to which the reduced heat transfer resistance is less than heat transfer resistance based on the heat engineering calculation for all the designed patterns.

Table 7: Percentage points, which the reduced heat transfer resistance is less than the heat transfer resistance based on the heat engineering calculations (after thermal modernization)

Panel thickness, mm	Designed pattern No.	Percentage points, which the reduced heat transfer resistance is less than the heat transfer resistance based on the heat engineering calculations
300 mm	1	53
	2	66
	3	25
	4	34
350 mm	1	52
	2	54
	3	25
	4	34

Deterioration of the reduced heat transfer resistance is affected by two factors: the presence of the window jamb (one or two) and the partition width. The more windows jambs are on the design scheme and the smaller partition width is, the more will be the percentage of heat transfer resistance decrease. The greater impact is produced by the presence of the window jamb.

To bring up the heat transfer resistance of the pattern (No.1) to the standardized value is possible by the following ways:

- increase the heat insulation thickness;
- insulate window jamb;
- insulate the window's quarter;
- Combined (increase the heat insulation thickness, insulate the window's quarter and reduce heat conductivity of the insulation).

The results of the calculation to implement these ways are presented in Table 8.

Table 8: Reduced heat transfer resistance based on the heat insulation variants for pattern No.1 of the 300 mm thick wall panel

No.	Variants of raising the reduced heat transfer resistance	$R_{q.min}$, $\mathrm{m^2\,K/W}$
1	Increase the heat insulation thickness from 100 mm to 200 mm	1.84
2	Insulate window jamb with a 50 mm thick layer	1.627
3	Insulate the window's quarter with a 30 mm thick layer	2.369
4	Increase the basic heat insulation thickness up to 150 mm, insulate the window's quarter with a 30 mm thick layer and apply heat insulator with heat conductivity by 17 % less than that determined in the heat engineering calculation (in the present case: $\lambda = 0.03\ \mathrm{W/(m \cdot K)}$)	3.307

As shown in Table 8, increasing the thickness of the insulation is not efficient. To achieve the standardized value, a significant amount of additional heat insulation is required.
Heat insulation of the window jamb with 50 mm thick layer also does not permit achieving the standardized value of the heat transfer resistance. The reason is that a significant amount of heat flow is moving from the inner wall surface to the outer wall surface along the additional layer of heat insulation on the window jamb and goes out through the cold window quarter (Figure 7). Further increasing the insulation layer on the window jamb is impossible due to the window design.

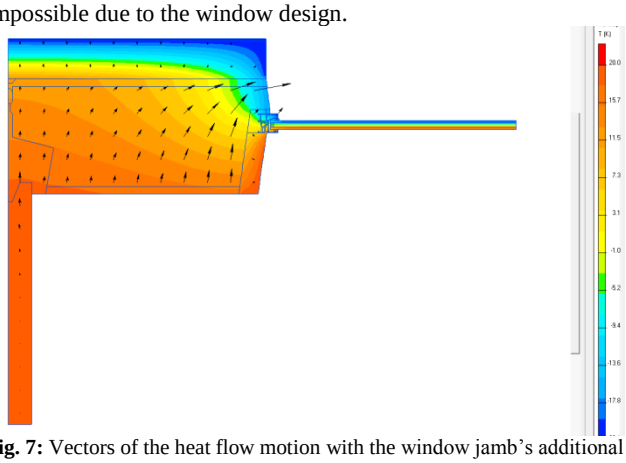

Fig. 7: Vectors of the heat flow motion with the window jamb's additional thermofiller layer thickness of 50 mm

Window jamb heat insulation with the additional thermofiller 30 mm thick layer can increase the reduced heat transfer resistance of the designed wall pattern No.1 from $R_{\Sigma red} = 1.598\ m^2\ K/W$ up to $R_{\Sigma red} = 2.369\ m^2\ K/W$. It is much better than the previous two variants, but it does not permit obtaining the standardized value. Further increase in the thickness of the additional heat insulation is impossible as the thermofiller will close the glazed part of the window.
To achieve the standardized value of the reduced heat transfer resistance is possible by the combined method (Figure 8), increasing the thickness of the basic insulation up to 150 mm, providing heat insulation of the window quarter with 30 mm thick layer and applying thermofiller with the heat conductivity by 17% less than that determined in the heat engineering calculation (in the present case: $\lambda = 0.03\ W/(m \cdot K)$).

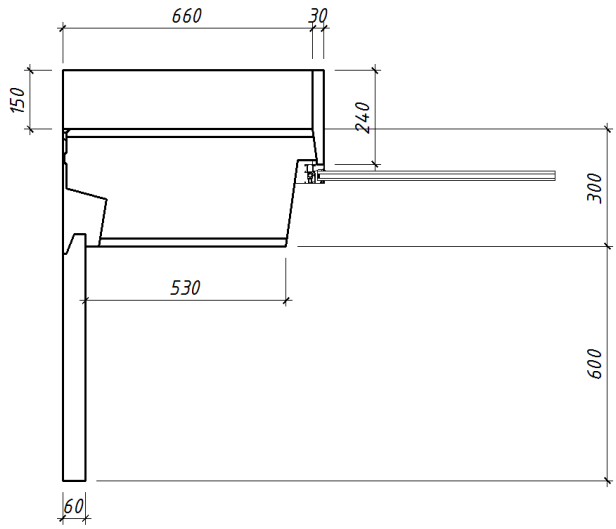

Fig. 8: Additional heat insulation of the designed pattern No.1 with the panel thickness of 300 mm based on the combined variant.

With this heat insulation variant:

- $R_{\Sigma red} = 3.307\ m^2\ K/W > R_{q.min} = 3.3\ m^2\ K/W$;
- $\Delta t_{red} = 1.4\ °C < \Delta t_{sh} = 4°C$;
- $\tau_{i.min} = 15.4°C > t_d = 10.7\ °C$.

All the heat insulation requirements are met.
The study results on all the four designed patterns of 300 mm thick panel walls are presented in Table 9.

Table 9: Reduced heat transfer resistance for designed patterns of 300 mm thick wall panels

No.	Heat insulation variants	$R_{\Sigma red}$
1	The basic heat insulation thickness is 150 mm, the window quarter thermofiller thickness is 30 mm. The thermofiller heat conductivity is $\lambda = 0.03\ W/(m \cdot K)$	3.307
2		3.304
3	End wall. The basic heat insulation thickness is 100 mm, the window quarter thermofiller thickness is 30 mm. The thermofiller heat conductivity is $\lambda = 0.03\ W/(m \cdot K)$	3.329
4	The basic heat insulation thickness along the longtitudinal wall is 150 mm, along the end wall is 110 mm, the window quarter thermofiller thickness is 30 mm. The thermofiller heat conductivity is $\lambda = 0.03\ W/(m \cdot K)$	3.336

The analogous studies of 350 mm thick panel walls are presented in Table 10

Table 10: Reduced heat transfer resistance of the 350 mm thick designed panel patterns

No.	Heat insulation variant	$R_{\Sigma red}$,
1	The basic heat insulation thickness is 150 mm, the window quarter thermofiller thickness is 30 mm. The thermofiller heat conductivity is $\lambda = 0.03\ W/(m \cdot K)$	3.375
2		3.369
3	End wall. The basic heat insulation thickness is 90 mm, the window quarter thermofiller thickness is 30 mm. The thermofiller heat conductivity is $\lambda = 0.03\ W/(m \cdot K)$	3.333
4	The basic heat insulation thickness along the longtitudinal wall is 150 mm, along the end wall is 110 mm, the window quarter thermofiller thickness is 30 mm. The thermofiller heat conductivity is $\lambda = 0.03\ W/(m \cdot K)$	3.42

7. Conclusion

1. Heat properties of panel houses walls of the first mass series in Poltava not meet the present day standards.
2. Heat transfer resistance of the existing buildings' wall panels is less than the standardized value within the range of 79% to 83%.
3. Reduced heat transfer resistance of the wall panels before the thermal modernization, which takes into account heat-conducting inclusions, is less than the heat transfer resistance based on the heat engineering calculation by an average of 4.5%.
4. Reduced heat transfer resistance of wall panels after the thermal modernization with insulation thickness based on the heat engineering calculation is less than the standardized value and heat transfer resistance based on the heat engineering calculations within the range of 25% to 66%.
5. To determine the reduced heat transfer resistance of the external walling structures with a large window area and with a small partitions width, it is necessary to use temperature fields calculations.
6. To meet the requirements to the heat protection of 300 mm thick panels, it is necessary to apply the 150 mm thick thermofiller along the longitudinal wall and the 110 mm thick thermofiller on the end wall. The 150 mm thick thermofiller should be installed in the end wall pattern located between the windows. The window quarter should be insulated with a 30 mm thick layer. The heat conductivity of the thermofiller is $\lambda = 0.03\ W/(m \cdot K)$.
7. For 350 mm thick panels the heat insulation thickness on the end wall is 90 mm, the rest values are the same as for 300 mm thick panels.

References

[1] Z. Ma, P. Cooper, D. Daly, L. Ledo. Existing building retrofits: methodology and state-of-the-art, Energy Build. **55**, 889 (2012) http://dx.doi.org/10.1016/j.enbuild.2012.08.018

[2] L. Tronchin, K. Fabbri. Energy performance building evaluation in Mediterranean countries: comparison between software simulations and operating rating simulation, Energy Build. **40**, 1176 (2008)

[3] C. Diakaki, E. Grigoroudis, N. Kabelis, D. Kolokotsa, K. Kalaitzakis, G. Stavrakakis. A multi-objective decision model for the improvement of energy efficiency in buildings, Energy **35**, 5483 (2010)

[4] Foucquier, F. Suard, S. Robert, L. Stephan, A. Jay. State of the art in building modelling and energy performances prediction: a review, Renew. Sustain. Energy Rev Renew. Sustain. Energy Rev. **23**, 272 (2013)

[5] Vasilyev G.P. Results of the heat transfer resistance definition of the external wall panels / G.P. Vasilyev, V.A. Lichman, S.S. Golubev // Information and printing establishment "Avoca-PRESS". - M .: 2012. - P. 74-81.

[6] Danilov N.D. Analysis of the temperature field formation on the external wall with facing reinforced concrete panel / N.D. Danilov, A.A. Sobakina, E.G. Slobodnikov // Zhylyshchnoye stroitelstvo [Housing Construction]. 2013. No.11. P. 46-49.

[7] Belyaev V.S. Energy efficiency of the external walls in large panel construction // Zhylyshchnoye stroitelstvo [Housing Construction]. 2011. No. 7. P. 23-26.

[8] Borodinecs A., Zemitis J., Sorokins J., Baranova D.V., Sovetnikov D.O. Renovation need for residential buildings in Latvia.// Civil Engineering Journal. 2016. No.8. P.58–64.

[9] Vasilyev G.P., Lichman V.A., Yurchenko I.A., Kolesova M.V. Method to assess the heat transfer performance uniformity factor based on thermograms analysis.// Civil Engineering Journal. 2016. No. 6. P. 60–67.

[10] Hassouneh K, Al-Shboul A, Salaymeh A, Influence of windows on the energy balance of apartment buildings in Amman, Energy Conversion and Management, 51(8), (2010), 1583–1591, DOI 10.1016/j.enconman.2009.08.037

[11] Mohsen MS, Akash BA, Some prospects of energy savings in buildings Amman, Energy Conversion and Management, 42(11), (2001), 1307–1315, DOI 10.1016/S0196-8904(00)00140-0.

[12] Portnyagin D.V. Heat protection improvement of node points in walling structures of buildings using the foam grall crystal material // Civil Engineering Journal. 2015. No8 (60). P. 56-67.

[13] Róbert Sztanyi. Construction defects in the subsequent insulation of panel buildings // Annals of the Oradea University Fascicle of Management and Technological Engineering ISSUE #1, MAY 2015

[14] E. Megyesi, M. Brumaru. "Evaluation of Energy Efficiency in Retrofitting Residential Buildings with Large-Panel Structures", Advanced Materials Research, Vol. 899, pp. 24-29, 2014. https://doi.org/10.4028/www.scientific.net/AMR.899.24

[15] Citterio M., Cocco M., Erhorn-Kluttig H. Thermal bridges in the EBPD context: overview on MS approaches in regulations. // EPBD Buildings Platform. 2008. 28-4. P.64.

[16] Pavlenko, A., Koshlak, H., Design of processes of thermal bloating of silicates, Metallurgical and Mining Industry, Vol.7, No1, (2015), pp.118-122, https://www.metaljournal.com.ua/assets/Journal/english-edition/MMI_2015_1/21%20Pavlenko.pdf

[17] Heat insulation of buildings: DBN B.2.6-31: 2006. - [Valid from 2007-04-01] // Ministry of Construction of Ukraine. - K .: Ukrarkhbudinform, 2006. - 65 p. - (National Building Regulations of Ukraine).

View publication stats